Model 1403-14A/084A100

PCB L&T fatigue rated load cell low profile, 2500 lbf rated capacity 300%

Installation and Operating Manual

For assistance with the operation of this product,
contact PCB Piezotronics, Inc.

Toll-free: 800-828-8840
24-hour SensorLine: 716-684-0001
Fax: 716-684-0987
E-mail: info@pcb.com
Web: www.pcb.com

Repair and Maintenance

PCB guarantees Total Customer Satisfaction through its "Lifetime Warranty Plus" on all Platinum Stock Products sold by PCB and through its limited warranties on all other PCB Stock, Standard and Special products. Due to the sophisticated nature of our sensors and associated instrumentation, **field servicing and repair is not recommended and, if attempted, will void the factory warranty**.

Beyond routine calibration and battery replacements where applicable, our products require no user maintenance. Clean electrical connectors, housings, and mounting surfaces with solutions and techniques that will not harm the material of construction. Observe caution when using liquids near devices that are not hermetically sealed. Such devices should only be wiped with a dampened cloth—never saturated or submerged.

In the event that equipment becomes damaged or ceases to operate, our Application Engineers are here to support your troubleshooting efforts 24 hours a day, 7 days a week. Call or email with model and serial number as well as a brief description of the problem.

Calibration

Routine calibration of sensors and associated instrumentation is necessary to maintain measurement accuracy. We recommend calibrating on an annual basis, after exposure to any extreme environmental influence, or prior to any critical test.

PCB Piezotronics is an ISO-9001 certified company whose calibration services are accredited by A2LA to ISO/IEC 17025, with full traceability to SI through N.I.S.T. In addition to our standard calibration services, we also offer specialized tests, including: sensitivity at elevated or cryogenic temperatures, phase response, extended high or low frequency response, extended range, leak testing, hydrostatic pressure testing, and others. For more information, contact your local PCB Piezotronics distributor, sales representative, or factory customer service representative.

Returning Equipment

If factory repair is required, our representatives will provide you with a Return Material Authorization (RMA) number, which we use to reference any information you have already provided and expedite the repair process. This number should be clearly marked on the outside of all returned package(s) and on any packing list(s) accompanying the shipment.

Contact Information

PCB Piezotronics, Inc.
3425 Walden Ave.
Depew, NY14043 USA
Toll-free: (800) 828-8840
24-hour SensorLine: (716) 684-0001
General inquiries: info@pcb.com
Repair inquiries: rma@pcb.com

For a complete list of distributors, global offices and sales representatives, visit our website, www.pcb.com.

Safety Considerations

This product is intended for use by qualified personnel who recognize shock hazards and are familiar with the precautions required to avoid injury. While our equipment is designed with user safety in mind, the protection provided by the equipment may be impaired if equipment is used in a manner not specified by this manual.

Discontinue use and contact our 24-Hour Sensorline if:

- Assistance is needed to safely operate equipment
- Damage is visible or suspected
- Equipment fails or malfunctions

For complete equipment ratings, refer to the enclosed specification sheet for your product.

Definition of Terms and Symbols

The following symbols may be used in this manual:

DANGER
Indicates an immediate hazardous situation, which, if not avoided, may result in death or serious injury.

CAUTION
Refers to hazards that could damage the instrument.

NOTE
Indicates tips, recommendations and important information. The notes simplify processes and contain additional information on particular operating steps.

The following symbols may be found on the equipment described in this manual:

This symbol on the unit indicates that high voltage may be present. Use standard safety precautions to avoid personal contact with this voltage.

This symbol on the unit indicates that the user should refer to the operating instructions located in the manual.

This symbol indicates safety, earth ground.

PCB工业监视和测量设备 - 中国RoHS2公布表

PCB Industrial Monitoring and Measuring Equipment - China RoHS 2 Disclosure Table

部件名称	有害物质					
	铅 (Pb)	汞 (Hg)	镉 (Cd)	六价铬 (Cr(VI))	多溴联苯 (PBB)	多溴二苯醚 (PBDE)
住房	O	O	O	O	O	O
PCB板	X	O	O	O	O	O
电气连接器	O	O	O	O	O	O
压电晶体	X	O	O	O	O	O
环氧	O	O	O	O	O	O
铁氟龙	O	O	O	O	O	O
电子	O	O	O	O	O	O
厚膜基板	O	O	X	O	O	O
电线	O	O	O	O	O	O
电缆	X	O	O	O	O	O
塑料	O	O	O	O	O	O
焊接	X	O	O	O	O	O
铜合金/黄铜	X	O	O	O	O	O

本表格依据 SJ/T 11364 的规定编制。

O： 表示该有害物质在该部件所有均质材料中的含量均在 GB/T 26572 规定的限量要求以下。

X： 表示该有害物质至少在该部件的某一均质材料中的含量超出 GB/T 26572 规定的限量要求。

铅是欧洲RoHS指令2011/65/ EU附件三和附件四目前由于允许的豁免。

CHINA RoHS COMPLIANCE

Component Name	Hazardous Substances					
	Lead (Pb)	**Mercury (Hg)**	**Cadmium (Cd)**	**Chromium VI Compounds (Cr(VI))**	**Polybrominated Biphenyls (PBB)**	**Polybrominated Diphenyl Ethers (PBDE)**
Housing	O	O	O	O	O	O
PCB Board	X	O	O	O	O	O
Electrical Connectors	O	O	O	O	O	O
Piezoelectric Crystals	X	O	O	O	O	O
Epoxy	O	O	O	O	O	O
Teflon	O	O	O	O	O	O
Electronics	O	O	O	O	O	O
Thick Film Substrate	O	O	X	O	O	O
Wires	O	O	O	O	O	O
Cables	X	O	O	O	O	O
Plastic	O	O	O	O	O	O
Solder	X	O	O	O	O	O
Copper Alloy/Brass	X	O	O	O	O	O

This table is prepared in accordance with the provisions of SJ/T 11364.

O: Indicates that said hazardous substance contained in all of the homogeneous materials for this part is below the limit requirement of GB/T 26572.

X: Indicates that said hazardous substance contained in at least one of the homogeneous materials for this part is above the limit requirement of GB/T 26572.
Lead is present due to allowed exemption in Annex III or Annex IV of the European RoHS Directive 2011/65/EU.

TABLE OF CONTENTS

1.0 INTRODUCTION 2

2.0 SAFETY PRECAUTIONS 2

3.0 OVERVIEW 2
3.1 Dimensions 2
3.2 Standard Components 3
3.3 Optional Components 3

4.0 MECHANICAL INSTALLATION 3
4.1 Mounting Bases 3
4.2 Mounting Load Cell to a Standard Base or Custom Fixture 3
4.3 Threaded Tension Rods 4
4.4 Mounting Optional Connector Protectors 4
4.4.1 Included Components in Kit (084A90) 4
4.4.2 Required Tools 4
4.4.3 Installation of Connector Protector 4

5.0 ELECTRICAL INSTALLATION 5
5.1 Electrical Drawing / Western Regional Std. 5
5.2 Cable & Grounding Considerations 5

6.0 CALIBRATION 5
6.1 Calibration Certificate Description 5
6.1.1 Measured Output 6
6.1.2 Hysteresis 6
6.1.3 Best Fit Output 6
6.1.4 Strain Gage Measurements 6
6.1.5 Shunt Calibration Standard Resistor 6
6.1.6 Static Error Band (SEB) 6

7.0 MOMENT COMPENSATION 6

8.0 FATIGUE & OVERLOAD 6

9.0 SHUNT CALIBRATION DESCRIPTION 7
9.1 Resistor Value 7
9.2 Shunt Calibration Process 7
9.3 Estimating Shunt Resistor for a Given Load 7

10.0 MAINTENANCE 7

11.0 TROUBLE SHOOTING 8
11.1 Mechanical Trouble Shooting 8
11.2 Electrical Trouble Shooting 8
11.2.1 Estimating Bridge Balance using an Ohm Meter 8

12.0 CALIBRATION / REPAIR SERVICES 8
12.1 RMA / Purchase Order 9

13.0 WARRANTY 9

1.0 INTRODUCTION

General purpose low profile load cells manufactured by PCB Load & Torque, Inc. are suitable for a wide range of general force measurement applications, including weighing, dynamometer use, and static material test machines. These load cells are designed for use in compression and tension loading, while being resistant to extraneous bending and side loading forces.

In addition to our general purpose load cells, we offer a complete line of fatigue-rated load cells which are specifically designed for highly cyclic testing. Applications include material testing, component life cycle testing, and structural testing. All fatigue-rated load cells are guaranteed against fatigue failure for 100 million fully reversed cycles, and are extremely resistant to extraneous bending and side loading forces.

The nominal full scale output of the general purpose low profile load cells is 4.0 mV/V for non-fatigue-rated (1200 series) and 2.0 mV/V for fatigue-rated (1400 series).

The following document explains how to properly install the low profile load cell, including detailed procedures on specified torques installation, adapter thread class 3 and tension pre-load specifications.

2.0 SAFETY PRECAUTIONS

Failure of the load cell structure or fasteners used in the load cell installation may cause personal injury and equipment damage.

It is important to provide adequate clearances and safety guards or shields properly surrounding test fixtures where fatigue rated load cells are used.

It is important to review the manufactured data when selecting rod ends and fasteners for load cell installation. Failure might occur due to combine measurement axis and extraneous loads if installation specifications are not followed. All test fixtures designed for use with low profile load cells should be carefully evaluated for potential failure modes of the fixtures.

It is important to use threaded fasteners properly when assembling test fixtures used with the load cells. Fixtures with inadequately designed bolted joints, or improperly tightened threaded fasteners can fail before the parts under test have completed the planned fatigue test cycles.

3.0 OVERVIEW

General purpose low profile load cells come in a variety of capacities to handle loads ranging from 250 lbf to 200,000 lbf.

3.1 Dimensions

The following figure and tables give the general outline dimensions of the general purpose low profile load cells with optional tension base.

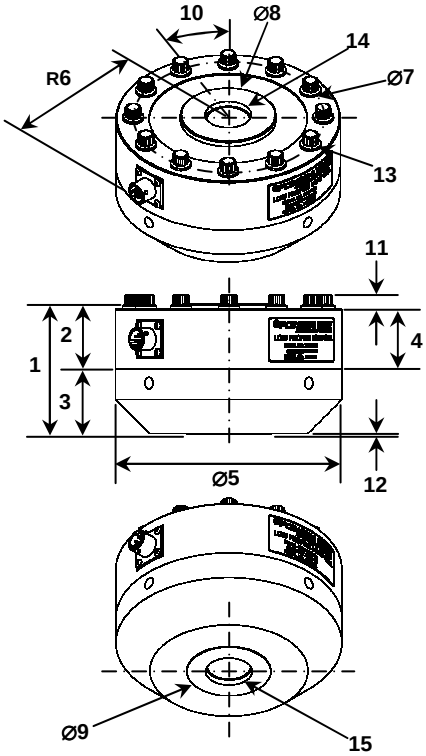

Figure 1 - Dimensions

Table 1 – Dimension Descriptions

Dim.	Description
1	Total Height
2	Load Cell Height
3	Tension Base Height
4	Load Cell Body Height
Ø5	Load Cell Diameter
R6	Max. Clearance Radius
Ø7	Bolt Circle Diameter
Ø8	Top Loading Surface Diameter
Ø9	Bottom Loading Surface Diameter
10	Angle Between Screws
11	Screw Head Height
12	Bottom Loading Surface Height
13	Screw for Tension Base
14	Load Cell Mounting Thread
15	Tension Base Mounting Thread

Table 2 – Dimension Values

Dimensions (see Figure 1)	Model Series							
	1203/1403		1204/1404		1208/1408		1211/1411	
	(in)	(mm)	(in)	(mm)	(in)	(mm)	(in)	(mm)
1	2.50	63.5	3.50	88.9	4.50	114.3	6.50	165.1
2	1.37	34.8	1.75	44.5	2.50	63.5	3.50	88.9
3	1.13	28.7	1.75	44.5	2.00	50.8	3.00	76.2
4	1.25	31.8	1.63	41.4	2.25	57.2	3.25	82.6
Ø5	4.12	104.6	6.06	153.9	8.00	203.2	11.00	279.4
R6	2.54	64.6	3.53	89.7	4.85*	123.2*	6.10*	154.9*
Ø7	3.50	88.9	5.13	130.2	6.50	165.1	9.00	228.6
Ø8	1.25	31.8	2.42	61.4	3.50	88.9	5.38	136.5
Ø9	1.25	31.8	2.25	57.2	3.50	88.9	4.50	114.3
10	45º		30º		22.5º		22.5º	
11	0.25	6.4	0.37	9.4	0.48	12.2	0.75	19.1
12	0.03	0.76	0.03	0.76	0.03	0.76	0.03	0.76
13	1/4-28x1 3/4 screw 12 pt. Qty. 8		3/8-24x2 1/4 screw 12 pt. Qty. 12		1/2-20x3 1/2 screw 12 pt. Qty. 16		3/4-16x4 1/2 screw 12 pt. Qty. 16	
14	5/8-18		1 1/4-12		1 3/4-12		2 3/4-8	
Thread Depth	0.88	22.4	1.37	34.8	2.12	53.8	2.56	65.0
15	5/8-18		1 1/4-12		1 3/4-12		2 3/4-8	
Thread Depth	0.88	22.4	1.37	34.8	1.71	43.4	3.15	80.0

*Indicates dimension with connector protector.

"R6" dimensions given for PT02E-10-6P connector.

3.2 Standard Components

The following figure describes the standard components of the general purpose low profile load cells.

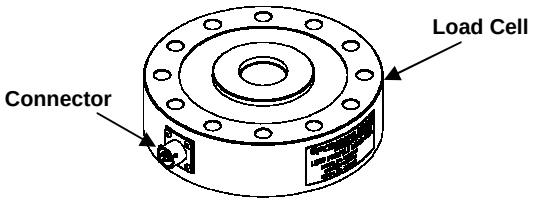

Figure 2 – Standard Components

3.3 Optional Components

The following figure describes the optional components of the general purpose low profile load cells.

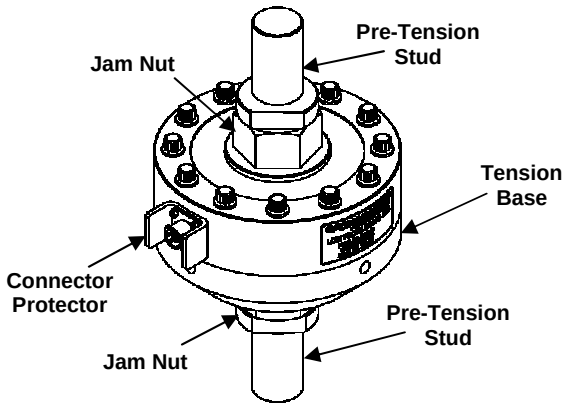

Figure 3 – Optional Components

NOTE: Connector protectors are standard on 8" and 11" models.

Table 3 describes the available optional components

Table 3 – Optional Components

Item Number	Item Description
084A40	Lifting Rings (side), 1211/1411 Series
084A41	Lifting Plug (top), 1211/1411 Series
084A55	Pre-Tension Stud (5/8"-18 Thread), 1203/1403 Series
084A56	Pre-Tension Stud (1 ¼"-12 Thread), 1204/1404 Series
084A57	Pre-Tension Stud (1 ¾"-12 Thread), 1208/1408 Series
084A58	Pre-Tension Stud (2 ¾"-8 Thread), 1211/1411 Series
084A59	Pre-Tension Stud (2 ¾"-8 to 1 ¾"-12 Thread) 1211/1411 Series
084A90	Connector Protector, 1403 and 1404 Series
084A100	Tension Base (5/8"-18 Thread) 1203/1403 Series
084A101	Tension Base (1 ¼"-12 Thread) 1204/1404 Series
084A103	Tension Base (1 ¾" -12 Thread) 1208/1408 Series
084A104	Tension Base (2 ¾" -8 Thread) 1211/1411 Series

NOTE: Pre-tension studs include the threaded stud and the jam nut.

NOTE: The use of the tension base greatly increases the performance of the low profile load cell.

4.0 MECHANICAL INSTALLATION

The following mechanical installation instructions should be observed if optional components are to be used.

4.1 Mounting Bases

All low-profile load cells are calibrated with a factory installed standard mounting base. An optional custom (customer supplied) mounting base can, with special arrangements, be installed and used for calibration. However, there will be an extra charge for the installation of the load cell on the customer's base / fixture.

NOTE: To insure catalog performance specifications are met the customer's supplied fixture or base must be flat to within 0.0002 inch and provide similar stiffness and hardness to a factory base.

Unless otherwise specified/requested, the load cell is calibrated with a factory installed mounting base. It is important to note that the performance of the load cell may be affected if the mounting base is not used or modified.

4.2 Mounting Load Cell to a Standard Base or Custom Fixture

If the load cell is to be mounted to a custom base or fixture, it is necessary to consider the following:

1. The thickness of the new base or fixture must not be any thinner than the original base supplied with the load cell. Materials used must have the same temperature coefficient of expansion (for example, 4140 Steel).

2. The mounting surface must be flat (within 0.0002 inches), and steel fixtures must have a hardness of Rockwell C 38 to 42.

3. The threaded holes and under-head of the fasteners must be lightly lubricated with 30 weight oil or equivalent prior to tightening the mounting bolts.

4. Refer to Table 4 for the final tightening torque required for each bolt size.

5. Tighten the bolts in an incremental cross pattern with the following sequence: start with all bolts finger tight followed by 25%, 50% and finally 100% of the required torque being applied.

Table 4 – Tension Base Installation Torque Values

Bolt Size	Part Number	Installation Torque
1/4-28x1 3/4	100-8011-10	15-17 LbFt (180-204 LbIn)
3/8-24x2 1/4	100-8082-20	75-80 LbFt (900-960 LbIn)
1/2-20x3 1/2	100-8011-30	120-130 LbFt (1440-1560 LbIn)
3/4-16x4 1/2	100-10026-40	370-400 LbFt (4440-4800 LbIn)

4.3 Threaded Tension Rods

NOTE: Threaded tension rods are an optional feature on the low profile load cell.

Installation of the load cell starts with tension pre-loading the load cell to 120-150% of full scale capacity and lightly tightening a jam nut to lock in the preload on both the load cell and base tension rods. Once the preload tension is released, the threads will be securely engaged.

Failure to pre-load the attachment rods/ fixtures can result in damage to the threads on the load cell and base during cyclic load tests.

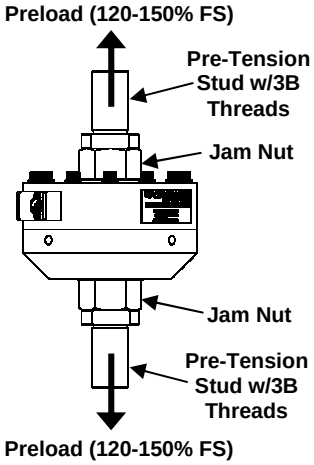

Figure 4 – Installation of Pre-Tension Studs

Threaded rods engaging the load cell should have Class 3 threads to ensure thread-to-thread close contact forces.

NOTE: It is important that the tension rods installed in the load cell and base use full thread engagement, but are not jammed, or torqued. They should be ½-1 turn from the bottom of the threads in both the base and load cell.

4.4 Mounting Optional Connector Protectors

Models 1203, 1403, 1204, and 1404 general purpose low profile load cells do not come standard with connector protectors. If optional connector protectors are to be mounted, it is necessary to consider the following:

4.4.1 Included Components in Kit (084A90)

Table 5 - Kit Components

Component	Quantity
Connector Protector (54823-02)	2
#4-40 x 3/8” Socket Head Cap Screw	8

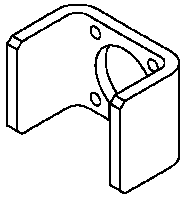

Figure 5 - Connector Protector (54823-02)

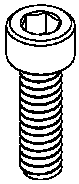

Figure 6 - #4-40 x 3/8” Socket Head Cap Screw

4.4.2 Required Tools

Table 6—Required Tools (Not Included)

1/16” Hex Wrench
3/32” Hex Wrench
Loctite® Threadlocker Blue 242®

4.4.3 Installation of Connector Protector

1. Remove the #4-40 x 1/4” button head cap screws from the connector using a 1/16” hex wrench as shown in Figure 7.
2. Carefully pull the connector from the load cell. Take care to not break or loosen any wire connections.
3. Slide the connector protector (54823-02) behind the connector as shown in Figure 8.
4. Apply a drop Loctite® Threadlocker Blue 242® to the threads of the #4-40 x 3/8” socket head cap screws.

NOTE: Please refer to the Loctite® Threadlocker Blue 242® technical data sheet for directions of use.

5. Attach the connector protector (54823-02) to the load cell with the #4-40 x 3/8” socket head cap screws using a 3/32” hex wrench as shown in Figures 9 and 10.

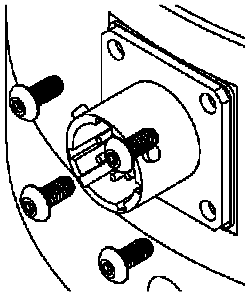

Figure 7 - Remove the #4-40 x 1/4” Button Head Cap Screws

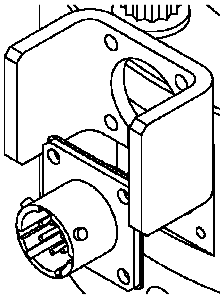

Figure 8 - Slide the Connector Protector (54823-02) Behind the Connector

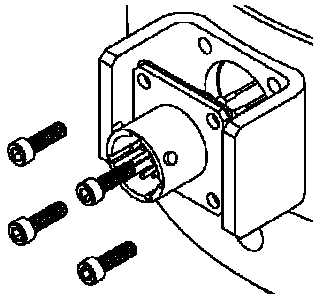

Figure 9 - Attach the Connector Protector (54823-02) using #4-40 x 3/8" Socket Head Cap Screws

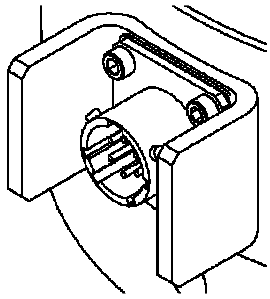

Figure 10 - Fully Assembled

5.0 ELECTRICAL INSTALLATION

Table 6 – Electrical Connection Options

Load Cell Receptacle "A":	PT02E-10-6P		
Mating Connector:	PT06A-10-6S	**PCB Item No:**	181-012A
Load Cell Receptacle "B":	PC04E-10-6P		
Mating Connector:	PC06A-10-6S	**PCB Item No:**	182-025A
Load Cell Receptacle "C":	PT02E-12-8P		
Load Cell Receptacle "D":	PC01E-12-8P		

5.1 Electrical Drawing / Western Regional Std.

All load cells are wired following the Western Region Standard. All models utilize strain gages configured into a Wheatstone Bridge Circuit to produce the primary sensing element. The four-arm Wheatstone bridge configuration is shown below in Figure 11.

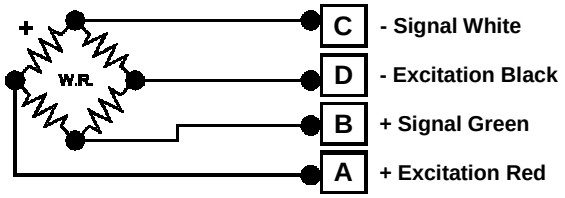

Figure 11 - Western Regional Strain Gage Committee Wiring Code

The gages are bonded to the load cell's structure. Typically, a regulated DC or AC excitation is applied between A and D of the bridge. When a force is applied to the load cell, the Wheatstone bridge becomes unbalanced, causing an output voltage between B and C, which is proportional to the applied load. This configuration allows for temperature and pressure compensation, as well as cancellation of signals caused by forces not directly applied to the axis of the applied load. Output is typically expressed in units of mV/V of excitation.

5.2 Cable & Grounding Considerations

Proper grounding and shielding is required to prevent electrical noise in strain gage load cell measuring systems. The cable must be shielded twisted pairs with a drain wire.

Cable shields must be grounded only at one end, for example, on the instrument or control system ground. The load cell case is grounded by mechanical attachment to the structure to which it is mounted.

The instrument or control system is grounded through its power cord. Ground loops and measuring system wiring may result in unstable or noisy signals.

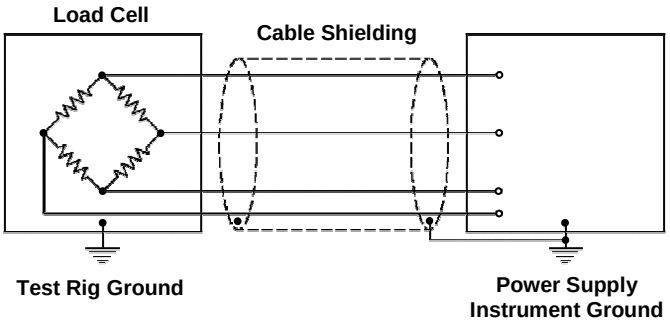

Figure 12 - Grounding

A simple test with a voltmeter connected between the power cord ground and the structure on which the load cell is mounted can confirm that the structure has been properly grounded. If the power cord ground and structure ground are not at the same potential, it may be necessary to provide a secure structure ground, perhaps by driving a copper rod and attaching a ground strap.

6.0 CALIBRATION

Every general purpose low profile load cell purchased from PCB Load & Torque, Inc. has been fully calibrated in tension and compression per ISO/IEC 17025 procedures, and meets all published specifications. Each load cell will come with a calibration certificate designated with matching model and serial numbers. PCB Load & Torque also offers calibration services on an on-going basis.

6.1 Calibration Certificate Description

Calibration reports supplied with PCB Load & Torque general purpose low profile load cells contain valuable information to assist the customer in use of the equipment. A separate calibration report is provided for tension and compression calibrations on each bridge. Calibration procedures, equipment, and reports comply with ISO/IEC 17025.

6.1.1 Measured Output

The applied load starting at zero is measured in five increments to full scale. Output (mV/V) is measured at each increment. The straight-line from zero to the full scale measurement is compared to the measured readings at each increment to calculate the error at each load increment. The deviations (% Full Scale) corresponding to non-linearity at each measurement increment are then calculated.

6.1.2 Hysteresis

The difference between the ascending and descending measured readings at 40% of full scale is used to calculate the hysteresis value.

6.1.3 Best Fit Output

The best fit calibration second-order equation has been calculated from the calibration data by the method of least squares. Deviation between measured output and best-fit output is calculated and displayed in the column next to the best-fit output for each measurement increment. The deviations (% Full Scale) of measured outputs from the calculated best fit are tabulated for each measured reading.

6.1.4 Strain Gage Measurements

Table 7 – Strain Gage Measurements

Bridge Resistance:	350 Ohm Nominal
Excitation:	+P(A) to –P(D) Ohms
Signals:	+S(B) to –S(C) Ohms
Leakage to Ground:	> 5k GOhm
Bridge Unbalance:	±1.0% Full Scale
Output:	4.0 mV/V Nominal (1200 Series)
	2.0 mV/V Nominal (1400 Series)
Maximum Voltage:	20 VDC

6.1.5 Shunt Calibration Standard Resistor

All low profile load cell calibrations use a 120kΩ (±0.1%) (for 1200 series) or a 60kΩ (±0.01%) (for 1400 series) precision resistor shunt calibration value that is supplied into the calibration report.

6.1.6 Static Error Band (SEB)

The static error band (SEB) is determined by the maximum deviations of the ascending and descending calibration points from the best fit straight line through zero output. The SEB includes the effects of nonlinearity, hysteresis, and non-return to minimum load.

7.0 MOMENT COMPENSATION

When an eccentric axial load is applied to a load cell that is not coincident exactly with the centerline of the load cell, it introduces bending moments into the load cell structure. The strain gage bridges on general purpose low profile load cells are adjusted such that the error due to eccentric loading is less than ±0.25% per inch of offset for 1200 series load cells and ±0.1% per inch of offset for fatigue-rated 1400 series load cells.

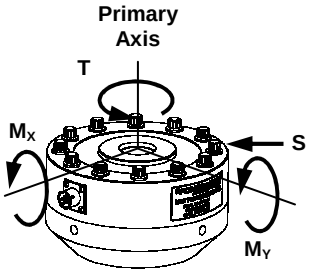

Figure 13 - Extraneous Loads

Side loads, moments and torque must be limited to avoid electrical or mechanical damage to the load cell. The allowable extraneous loads are directly related to the rated capacity of the load cell.

- Maximum side force allowed is 100% of the rated capacity for the load cell.
- Maximum moment allowed is 100% of the rated capacity times 1 inch.
- Maximum torque allowed about the measurement axis is rated capacity times 1 inch.

8.0 FATIGUE & OVERLOAD

Fatigue-rated low profile load cells (1400 series) are designed and manufactured to perform accurately and reliably for 100 million fully reversed full scale load cycles. They have been specifically designed for applications involving high cycle fatigue loading on products and structures. The designs are based on nearly three decades (since 1986) of experience in the design and manufacture of precision low-height load cells.

The load cell structure is machined from aircraft quality alloy steel, heat treated, and finished with attention to details critical for maximum fatigue life. For maximum stiffness and low stresses throughout the load cell structure, the maximum stresses are concentrated precisely under the strain gages.

The load cell structural safety factor against fatigue failure is in excess of 2.5 for alloy steel and 2 for aluminum. See Figure 14. The maximum shear stress measured by the bonded strain gages is less than 40% of the endurance limit shear stress for alloy steel and 48% for aluminum.

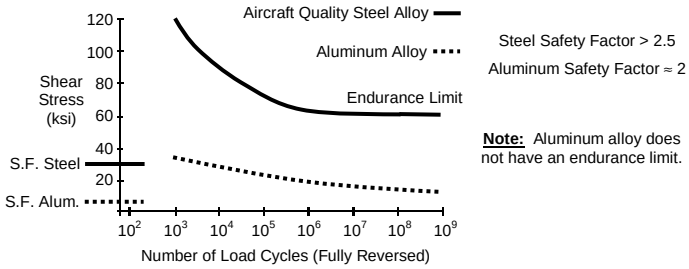

Figure 14 - S-N Curve (Load Cell)

The strain gages used are made with Modulus Compensated Modified Karma Alloy. The alloy steel gages have a safety factor against fatigue of approximately 2, and the aluminum gages' is approximately 4 as shown in Figure 15.

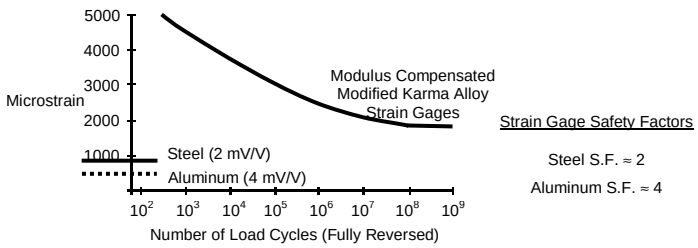

Figure 15 - Strain-N Curve (Strain Gages)

Fatigue-rated low profile load cells are capable of surviving exceptionally high overloads. Occasional loads up to 300% of the rated capacity (due to accidental overload) have a safety factor against yield of the strain gage sections of approximately 1.5 for both alloy steel and aluminum as shown in Figure 16. Non-fatigue-rated low profile load cells can handle loads up to 150% of the rated capacity.

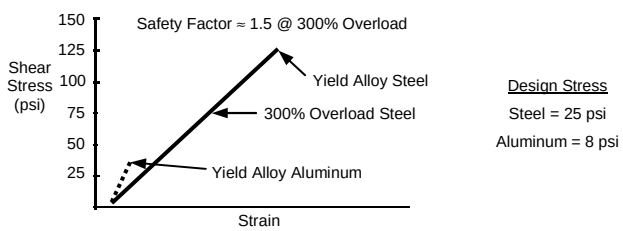

Figure 16 - Shear Stress/Strain Curves (Fatigue-Rated Load Cell)

9.0 SHUNT CALIBRATION DESCRIPTION

Shunt calibration is used to simulate a known tension or compression load on a load cell. The calibration certificate will indicate which leg of the bridge to apply the shunt resistor to for both tension and compression load simulation. Typically tension is simulated by inserting the shunt resistor between the +P and +S connector leads. Compression loading is simulated by inserting the shunt resistor between the +S and –P connector leads.

9.1 Resistor Value

General purpose low profile load cells have a nominal 4.0 mV/V full scale output for non-fatigue rated and a nominal 2.0 mV/V full scale output for fatigue-rated. For a 350Ω strain gage bridge the precision shunt resistor, 120kΩ ±0.1% for non-fatigue-rated (1200 series), and 60kΩ ± 0.01% for fatigue-rated (1400 series), simulates an output of approximately 73% of the full scale output for the load cell. The calibration values for each bridge are found on the calibration certificates supplied with each load cell.

9.2 Shunt Calibration Process

To perform the shunt calibration, use the following procedure:

1. Stabilize all forces on the load cell. If possible, remove all loads.
2. Power up the host signal conditioner and connect it to the load cell via appropriate cable, and allow for a 30 minute warm up.
3. Set the load indicator display to read exactly 00.000.
4. Connect the shunt resistor to the terminals specified in the calibration certificate, and adjust the span or gain until the display reads the force value stated on the certificate.
5. Repeat steps 1-3 to verify that a valid calibration setting has been obtained.
6. If possible, apply a known load to the measurement system to further verify that the calibration has been accurately set up.

9.3 Estimating Shunt Resistor for a Given Load

The following formula can be used to estimate the approximate value of shunt resistor required to simulate a mechanical load.

$$R_{cal} = (25 * R_b) / (Output_{FS} * L_{cal})$$

Where:

R_{cal} = Shunt Resistor (K ohms)
R_b = Bridge Resistance (ohms)
$Output_{FS}$ = Full Scale output of the load cell (mV/V)
L_{cal} = Load to be simulated, % of Load Cell Capacity

10.0 MAINTENANCE

Routine maintenance of the low profile load cell should include cleaning the electrical connectors, housings, and mounting surfaces with solutions and techniques that will not harm the physical material of construction. Make sure liquids

are not allowed to migrate into devices that are not hermetically sealed. Such devices should only be wiped with a damp cloth, and never be submerged or have liquids poured on them. Never use a pressure washer on the load cells.

General purpose low profile load cells, when mounted on the factory supplied base, are barometric compensated through a small port located in one of the spanner wrench holes on the base.

The bolts used to install bases at the factory have been tightened to specifications to prevent loosening under normal usage. However, if the base has been removed for any reason, or the load cell has been mounted on a custom fixture without the base, it is a good idea to periodically test the mounting bolt tightness using a calibrated torque or click wrench.

11.0 TROUBLE SHOOTING

Proper performance of a load cell requires careful attention to both electrical and mechanical aspects of the measurement system. A basic understanding of the electrical and mechanical installation requirements is recommended.

11.1 Mechanical Trouble Shooting

A mechanical checklist includes:

1. Check for proper installation of load cell.
2. Check for properly tightened bolts.

11.2 Electrical Trouble Shooting

An electrical checklist should start with:

1. Check cables for proper wiring.
2. Inspect for loose or dirty electrical connections.
3. Check for improper shield grounds.
4. Check for proper grounding of the structure that the load cell is mounted on.
5. Check the signal conditioning electronics for proper setup.
6. Check the insulation resistance of shielded conductors for short circuits.
7. Check isolation resistance, load cell flexure to conductors.
8. Check load cell bridge resistances, (A-D) excitation and (B-C) the signal leads.
9. Check bridge balance.
10. Keep a record of your observations, correct problems, or contact PCB factory for assistance.

11.2.1 Estimating Bridge Balance using an Ohm Meter

A load cell that has been severely overloaded will exhibit a significant zero offset in the Wheatstone bridge. It can be useful to estimate the bridge unbalance using a digital ohm meter with resolution of at least 0.1 ohm.

Following the Western Region wiring diagram measure the resistances for each leg of the bridge, i.e.: R_{AB}, R_{AC}, R_{DB}, and R_{DC}.

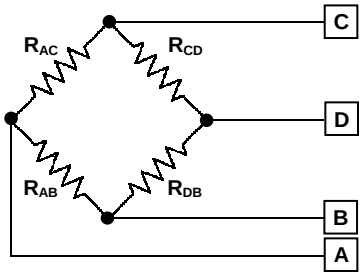

Figure 17 – Wheatstone Bridge

1. Estimate the Zero Offset (mV/V):

   Zero Offset = 1.4 x (R_{AC} - R_{AB} + R_{DB} - R_{CD})

2. Estimate the Bridge Unbalance (% Full Scale):

   Bridge Unbalance = 100 x (Zero Offset / $Output_{FS}$)

Where:

$Output_{FS}$ = Full Scale output of the load cell (mV/V)

A Zero Offset of greater than 10% indicates probable overload or possible fatigue damage. A load cell that has been significantly overloaded enough to create a large zero offset is not repairable. In some instances it may be possible to temporarily continue to use the load cell by attempting to balance the bridge through use of external resistors. However, the user should expect that such a load cell no longer will meet the performance parameters related to its original specifications. (User beware!!)

12.0 CALIBRATION / REPAIR SERVICES

PCB Load & Torque offers calibration and repair services. The PCB Calibration Laboratory in Farmington Hills, Michigan is A2LA Accredited per ISO/IEC 17025.

Standard calibration certificates list five force points ascending and one point descending in both tension and compression. Additional data points are available at extra cost upon request.

Certificate information includes tabulated measurement variable data zero balance, bridge input/output resistance, computer nonlinearity and hysteresis, static error band (SEB) calculations and entries abilities and traceability statements.

If an initial evaluation shows that a transducer requires repair, PCB will provide the customer with an estimate prior to taking any corrective action.

12.1 RMA / Purchase Order

Please request a return material authorization (RMA) before sending a load cell back to the factory for any reason. For calibration services, if possible, a copy of the purchase order covering the requested services should be included with the returned load cell.

13.0 WARRANTY

Standard warranty on general purpose low profile load cells covers parts and workmanship. For full details, refer to the Warranty Statement supplied with each load cell.

If the load cell is defective for reasons other than overloads, return it to the factory for detailed evaluation. Factory evaluation may show that the load cell is repairable or non-repairable and if repair or replacement will be under warranty. If not under warranty, the customer will be contacted with the cost of repairs and recalibration. Once authorization to proceed is received, a delivery date will be provided.

Manual Number: 56261
Manual Revision: NR
Revision Date: 6/12/13
ECO Number: 41636

Model Number	FATIGUE RATED LOW PROFILE LOAD CELL	Revision: B ECN #: 43809
1403-14A		

Performance	**ENGLISH**	**SI**	
Measurement Range(100 x 10^6 cycles)	2500 lb	11 kN	[6][7]
Sensitivity(± 10 %)(RO)	2.0 mV/V	2.0 mV/V	[3][1]
Non-Linearity	≤ 0.04 % FS	≤ 0.04 % FS	[6][8]
Hysteresis	≤ 0.04 % FS	≤ 0.04 % FS	[6][8]
Non-Repeatability	≤ 0.02 %RO	≤ 0.02 %RO	[3][8]
Eccentric Load Sensitivity	0.1 %/in	0.1 %/25.4mm	[8]
Resonant Frequency	7.0 kHz	7.0 kHz	
Side Load Sensitivity	0.1 %/in	0.1 %/25.4mm	[8]
Creep(in 20 minutes)	0.025 %	0.025 %	[8]
Static Error Band	≤ 0.04 % FS	≤ 0.04 % FS	[6][8]
Environmental			
Overload Limit	7500 lbf	33 kN	
Load Limit(Side Force, F_X or F_Y)	5000 lbf	22 kN	[4]
Load Limit(Bending Moment, M_X or M_Y)	5000 lbf-in	565 Nm	[4]
Load Limit(Axial Torque, M_Z)	5000 lbf-in	565 Nm	[4]
Temperature Range(Operating)	-65 to +200 °F	-54 to +93 °C	
Temperature Range(Compensated)	+15 to +115 °F	-9 to +46 °C	
Temperature Effect on Output(Maximum)	± 0.0008 %Reading/°F	± 0.0018 %Reading/°C	[5]
Temperature Effect on Zero Balance(Maximum)	± 0.0008 %FS/°F	± 0.0018 %FS/°C	[5]
Electrical			
Bridge Resistance	350 Ohm	350 Ohm	[1]
Excitation Voltage(Recommended)	10 VDC	10 VDC	[2]
Insulation Resistance	>5k GOhm	>5k GOhm	
Zero Balance	± 1 %RO	± 1 %RO	[3]
Output Polarity	+Tension	+Tension	
Physical			
Size (Diameter x Height)	4.12 in x 2.50 in	104.6 mm x 63.5 mm	[9]
Weight	6.4 lb	2.9 kg	
Mounting Thread	5/8 - 18 UNF-3B	No Metric Equivalent	
Housing Material	Painted Steel	Painted Steel	
Sensing Element	Strain Gage	Strain Gage	
Mounting Torque	200 lbf-in	23 Nm	
Deflection at Full Scale Capacity	0.0005 in	0.0125 mm	
Electrical Connector	PT02E-10-6P	PT02E-10-6P	

All specifications are at room temperature unless otherwise specified.
In the interest of constant product improvement, we reserve the right to change specifications without notice.

OPTIONAL VERSIONS

Optional versions have identical specifications and accessories as listed for the standard model except where noted below. More than one option may be used.

1403-14B - PC04E-10-6P Connector

1403-14C - PT02E-12-8P Connector

1403-14D - PC01E-12-8P Connector

NOTES:

[1]Nominal.
[2]Calibrated at 10 VDC, usable 5 to 20 VDC or VAC RMS.
[3]RO - Rated Output.
[4]Singularly applied, i.e. no other extraneous loads.
[5]Over compensated operating temperature range.
[6]FS - Full Scale.
[7]Calibrated in tension and compression.
[8]Performance specifications guaranteed with factory installed optional Tension Base 084A100
[9]See Outline Drawing 49932 for Complete Dimensions

OPTIONAL ACCESSORIES:

Model 084A100 TENSION LOAD BASE W/ 5/8-18 UNF-3B THD
Model 084A55 Pre-Tension Stud
Model 084A90 Connector Shroud
Model 181-012A PT06A-10-6S(SR)
Model 8311-01-10A CABLE

Entered: AP	Engineer: PE	Sales: JC	Approved: JSD	Spec Number:
Date: 2/16/2015	Date: 2/16/2015	Date: 2/16/2015	Date: 2/16/2015	**56132**

PCB LOAD & TORQUE
A PCB GROUP COMPANY

PCB Load & Torque, Inc.
24350 Indoplex Circle
Farmington Hills, MI 48335
UNITED STATES
Phone: 866-684-7107
Fax: 716-684-0987
E-Mail: ltinfo@pcbloadtorque.com
Web site:
http://www.pcbloadtorque.com

PCB Load & Torque Inc. claims proprietary rights in the information disclosed hereon. Neither it nor any reproduction thereof will be disclosed to others without the written consent of PCB Load and Torque Inc.

49605

REVISIONS		
REV	DESCRIPTION	ECO
E	HUB DIAMETER WAS 1.25 [31.8] - 10.05.16, PTE	46027

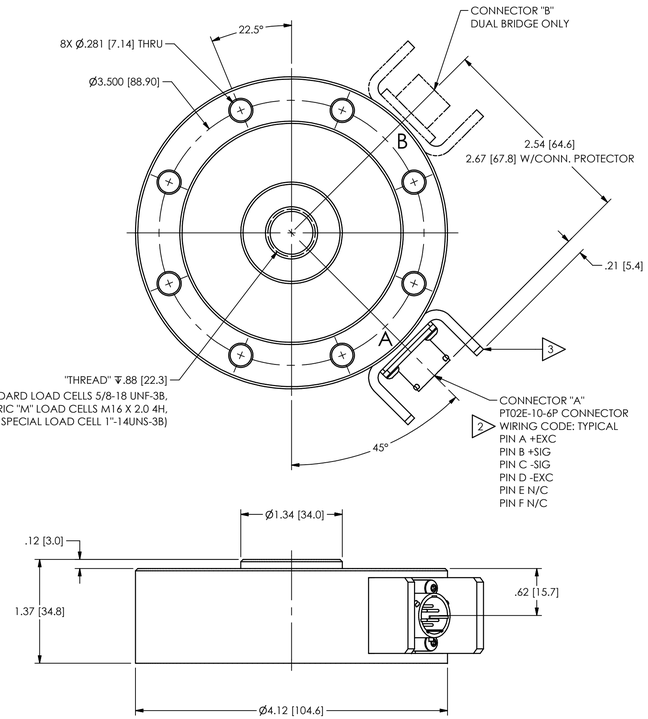

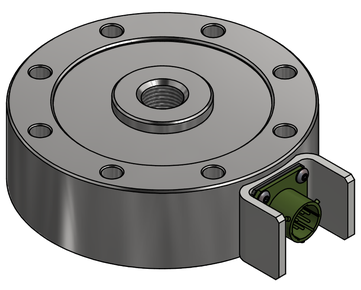

1203, M1203, 1403 AND M1403 SERIES LOAD CELLS
INCLUDING DUAL BRIDGE

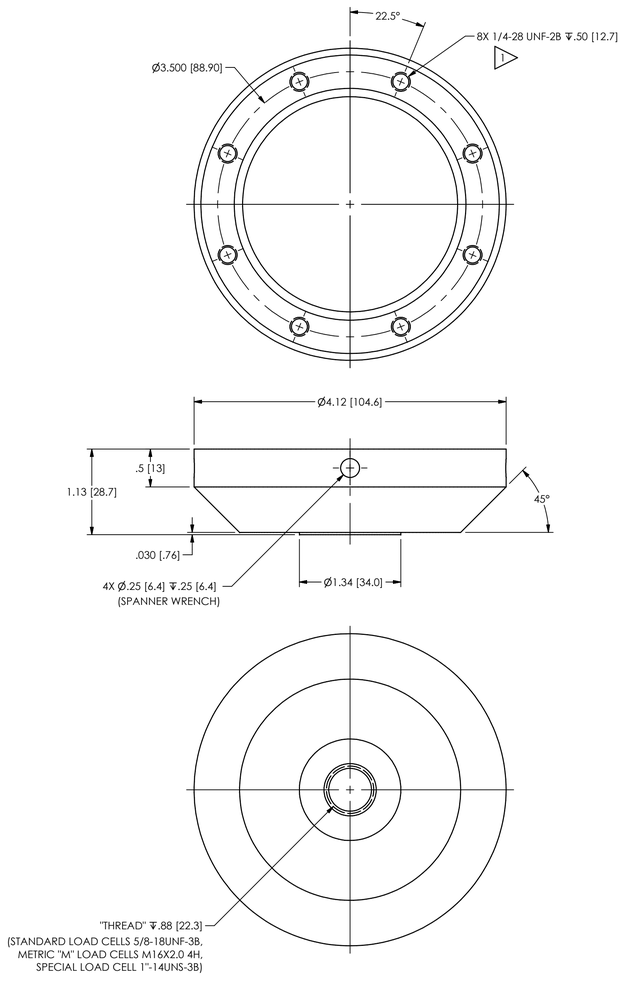

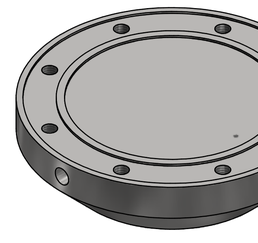

1203, M1203, 1403 AND M1403 SERIES BASES

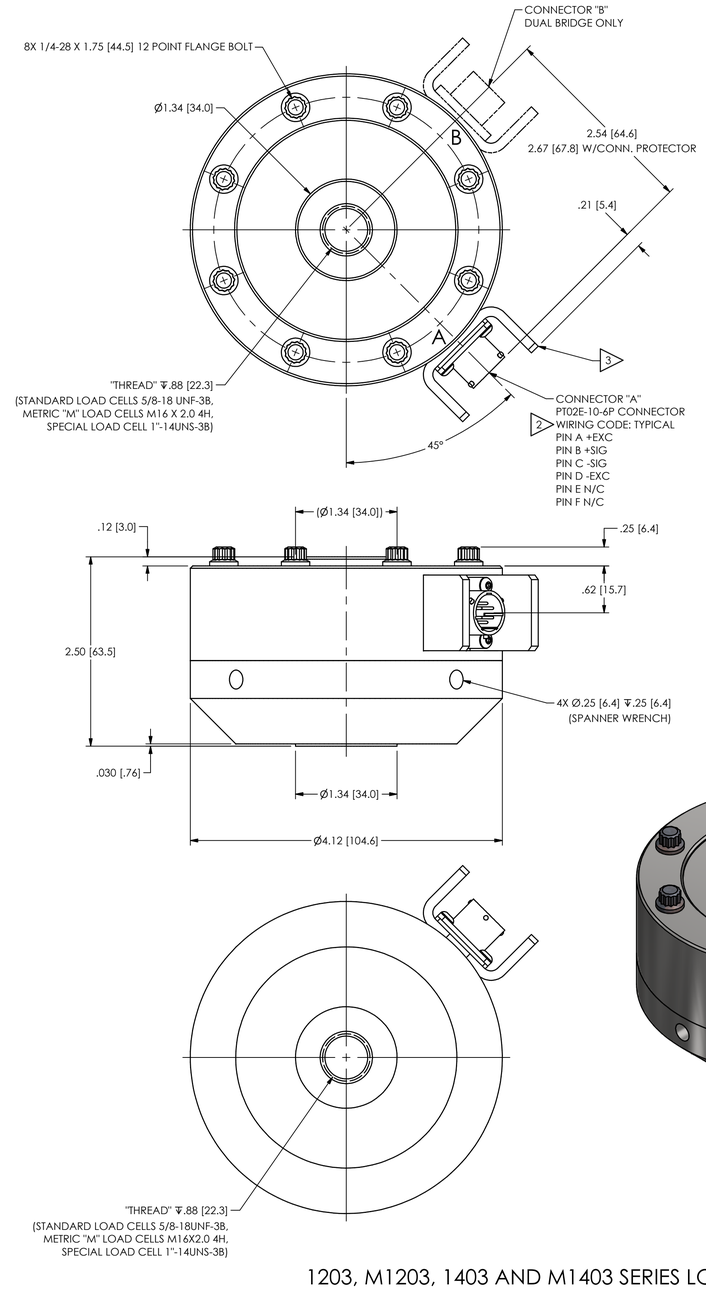

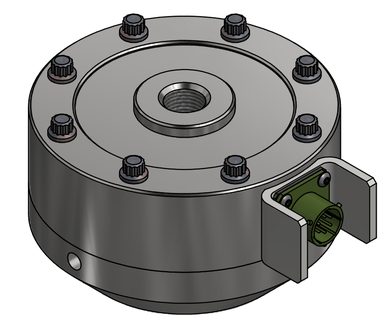

1203, M1203, 1403 AND M1403 SERIES LOAD CELLS W/BASES
INCLUDING DUAL BRIDGE

3 MODEL 084A90 CONNECTOR PROTECTOR SHOWN:
OPTIONAL ON ALL 1203/M1203 SERIES AND 1403/M1403 SINGLE BRIDGE LOAD CELLS
STANDARD ON 1403/M1403 SERIES DUAL BRIDGE LOAD CELLS

2 WIRING CODE FOR "T" SERIES LOAD CELLS

PIN A +EXC.
PIN B +SIG.
PIN C -SIG.
PIN D -EXC.
PIN E TEDS DATA
PIN F TEDS GROUND

1 SUPPLIED WITH MATING FASTENERS.

UNLESS OTHERWISE SPECIFIED TOLERANCES ARE:		DRAWN		CHECKED		ENGINEER	
DIMENSIONS IN INCHES	DIMENSIONS IN MILLIMETERS [IN BRACKETS]	MDF	11/21/11	JDM	11/21/11	PTE	11/21/11
DECIMALS XX ±.01 XXX ±.005	DECIMALS X ±0.3 XX ±0.13	TITLE					
ANGLES ± .5 DEGREES	ANGLES ± .5 DEGREES	OUTLINE DRAWING 1203/1403 SERIES, PT CONNECTOR LOW PROFILE LOAD CELLS					
FILLETS AND RADII .015 MAX	FILLETS AND RADII 0.38 MAX						

PCB LOAD & TORQUE
A PCB GROUP COMPANY
24350 Indoplex Circle, Farmington Hills, MI 48335
(716) 684-0001 E-MAIL: lfinfo@pcbloadtorque.com

DWG. NO. 49605

SCALE: FULL SHEET 1 OF 1