APPLICATION		
NEXT ASS'Y	USED ON	VAR

REVISIONS				
REV	DESCRIPTION	ECN	DATE	APP'D

2944

PCB Piezotronics Inc. claims proprietary rights in the information disclosed hereon. Neither it nor any reproduction thereof will be disclosed to others without written consent of PCB Piezotronics Inc.

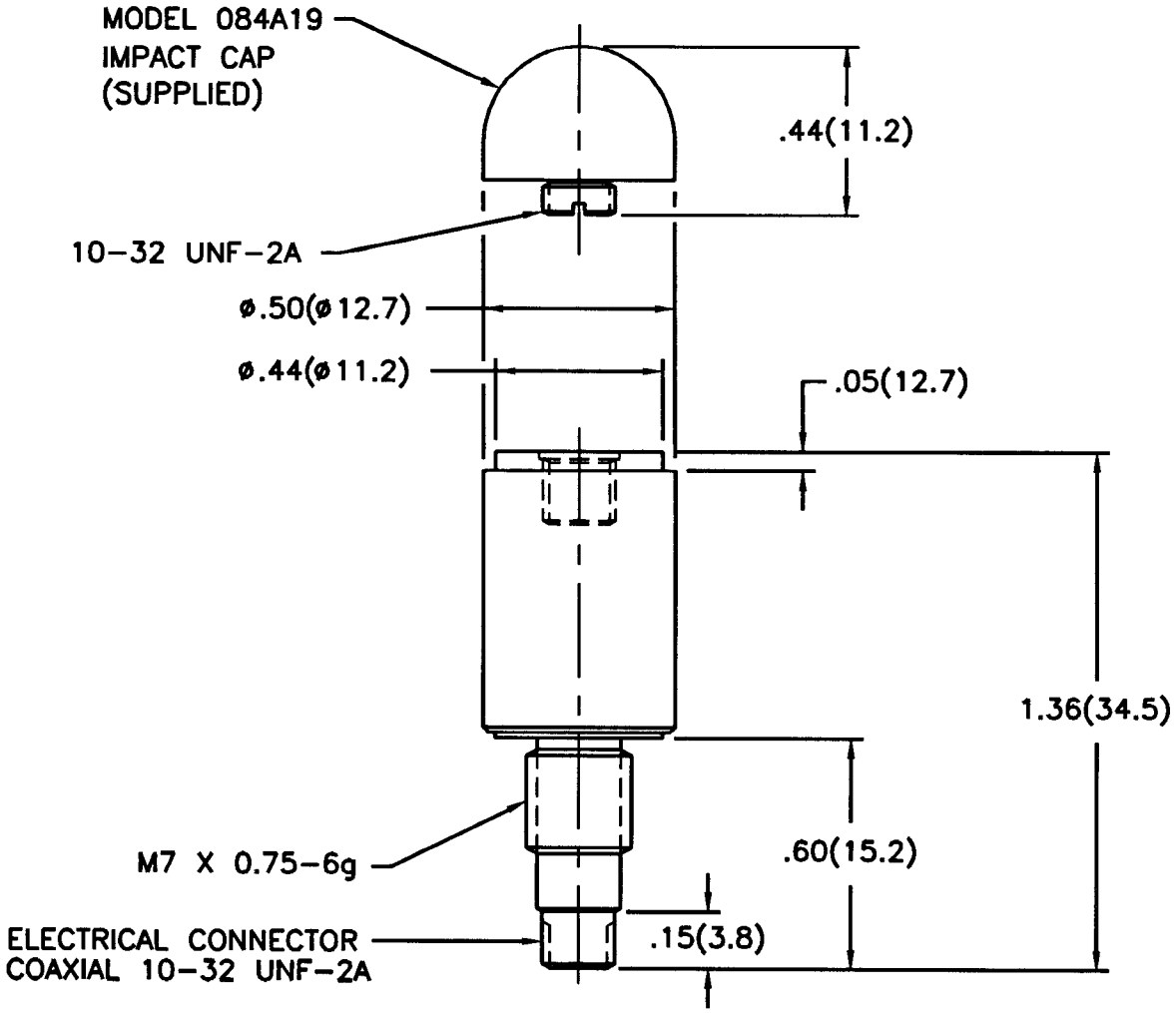

MOUNTING HOLE PREPARATION:

DRILL ø.250(ø6.35) 2
THRU
TAP M7 X 0.75-6H
THRU

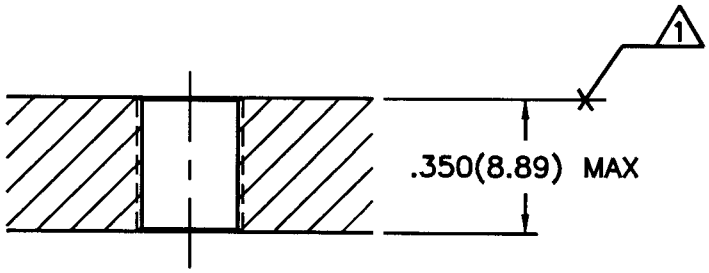

3.) RECOMMENDED MOUNTING TORQUE 20-24 INCH POUNDS(226-271 NEWTON CENTIMETERS.)

2 DRILL PERPENDICULAR TO MOUNTING SURFACE TO WITHIN ± 1°.

1 MOUNTING SURFACE UNDER TRANSDUCER MUST BE FLAT WITHIN .001(0.03) TIR OVER A ø.50(ø12.7) MIN WITH A 63 √ (1.6 √) FIN.

UNLESS SPECIFIED TOLERANCES	
DIMENSIONS IN INCHES	DIMENSIONS IN MILLIMETERS (IN PARENTHESIS)
DECIMALS XX ±.01 XXX ±.005 ANGLES ±2 DEGREES	DECIMALS XX ±0.3 XXX ±0.13 ANGLES ±2 DEGREES
FILLETS AND RADII .003 - .005	FILLETS AND RADII (0.07 - 0.13)
D0011 REV. A 05/26/95	

DRAWN	TAB	7/11/95	MFG	D.B.L.	7/11/95
CHK'D	DM	7/11/95	ENGR	RC	7-11-95
APP'D	B.V.	7/20/95	SALES	GN	7-19-95

TITLE
INSTALLATION DRAWING
MODEL 208A33
FORCE TRANSDUCER

PCB PIEZOTRONICS, INC.
3425 WALDEN AVE. DEPEW, NEW YORK 14043
PHONE: (716) 684-0001

CODE IDENT. NO.	DWG. NO.
52681	2944
SCALE: 2X	SHEET 1 OF 1