# Model 682A01

## 24 VDC DIN Rail Mount Power Supply

## Installation and Operating Manual

**For assistance with the operation of this product,**
**contact PCB Piezotronics, Inc.**

**Toll-free: 800-828-8840**
**24-hour SensorLine: 716-684-0001**
**Fax: 716-684-0987**
**E-mail: info@pcb.com**
**Web: www.pcb.com**

## Repair and Maintenance

PCB guarantees Total Customer Satisfaction through its "Lifetime Warranty Plus" on all Platinum Stock Products sold by PCB and through its limited warranties on all other PCB Stock, Standard and Special products. Due to the sophisticated nature of our sensors and associated instrumentation, **field servicing and repair is not recommended and, if attempted, will void the factory warranty**.

Beyond routine calibration and battery replacements where applicable, our products require no user maintenance. Clean electrical connectors, housings, and mounting surfaces with solutions and techniques that will not harm the material of construction. Observe caution when using liquids near devices that are not hermetically sealed. Such devices should only be wiped with a dampened cloth—never saturated or submerged.

In the event that equipment becomes damaged or ceases to operate, our Application Engineers are here to support your troubleshooting efforts 24 hours a day, 7 days a week. Call or email with model and serial number as well as a brief description of the problem.

## Calibration

Routine calibration of sensors and associated instrumentation is necessary to maintain measurement accuracy. We recommend calibrating on an annual basis, after exposure to any extreme environmental influence, or prior to any critical test.

PCB Piezotronics is an ISO-9001 certified company whose calibration services are accredited by A2LA to ISO/IEC 17025, with full traceability to SI through N.I.S.T. In addition to our standard calibration services, we also offer specialized tests, including: sensitivity at elevated or cryogenic temperatures, phase response, extended high or low frequency response, extended range, leak testing, hydrostatic pressure testing, and others. For more information, contact your local PCB Piezotronics distributor, sales representative, or factory customer service representative.

## Returning Equipment

If factory repair is required, our representatives will provide you with a Return Material Authorization (RMA) number, which we use to reference any information you have already provided and expedite the repair process. This number should be clearly marked on the outside of all returned package(s) and on any packing list(s) accompanying the shipment.

## Contact Information

PCB Piezotronics, Inc.
3425 Walden Ave.
Depew, NY14043 USA
Toll-free: (800) 828-8840
24-hour SensorLine: (716) 684-0001
General inquiries: info@pcb.com
Repair inquiries: rma@pcb.com

For a complete list of distributors, global offices and sales representatives, visit our website, www.pcb.com.

## Safety Considerations

This product is intended for use by qualified personnel who recognize shock hazards and are familiar with the precautions required to avoid injury. While our equipment is designed with user safety in mind, the protection provided by the equipment may be impaired if equipment is used in a manner not specified by this manual.

Discontinue use and contact our 24-Hour Sensorline if:

- Assistance is needed to safely operate equipment
- Damage is visible or suspected
- Equipment fails or malfunctions

For complete equipment ratings, refer to the enclosed specification sheet for your product.

## Definition of Terms and Symbols

**The following symbols may be used in this manual:**

**DANGER**
Indicates an immediate hazardous situation, which, if not avoided, may result in death or serious injury.

**CAUTION**
Refers to hazards that could damage the instrument.

**NOTE**
Indicates tips, recommendations and important information. The notes simplify processes and contain additional information on particular operating steps.

**The following symbols may be found on the equipment described in this manual:**

This symbol on the unit indicates that high voltage may be present. Use standard safety precautions to avoid personal contact with this voltage.

This symbol on the unit indicates that the user should refer to the operating instructions located in the manual.

This symbol indicates safety, earth ground.

PCB工业监视和测量设备 - 中国RoHS2公布表

PCB Industrial Monitoring and Measuring Equipment - China RoHS 2 Disclosure Table

| 部件名称 | 有害物质 | | | | | |
|---|---|---|---|---|---|---|
| | 铅 (Pb) | 汞 (Hg) | 镉 (Cd) | 六价铬 (Cr(VI)) | 多溴联苯 (PBB) | 多溴二苯醚 (PBDE) |
| 住房 | O | O | O | O | O | O |
| PCB板 | X | O | O | O | O | O |
| 电气连接器 | O | O | O | O | O | O |
| 压电晶体 | X | O | O | O | O | O |
| 环氧 | O | O | O | O | O | O |
| 铁氟龙 | O | O | O | O | O | O |
| 电子 | O | O | O | O | O | O |
| 厚膜基板 | O | O | X | O | O | O |
| 电线 | O | O | O | O | O | O |
| 电缆 | X | O | O | O | O | O |
| 塑料 | O | O | O | O | O | O |
| 焊接 | X | O | O | O | O | O |
| 铜合金/黄铜 | X | O | O | O | O | O |

本表格依据 SJ/T 11364 的规定编制。

O： 表示该有害物质在该部件所有均质材料中的含量均在 GB/T 26572 规定的限量要求以下。

X： 表示该有害物质至少在该部件的某一均质材料中的含量超出 GB/T 26572 规定的限量要求。

铅是欧洲RoHS指令2011/65/ EU附件三和附件四目前由于允许的豁免。

CHINA RoHS COMPLIANCE

| Component Name | Hazardous Substances | | | | | |
|---|---|---|---|---|---|---|
| | **Lead (Pb)** | **Mercury (Hg)** | **Cadmium (Cd)** | **Chromium VI Compounds (Cr(VI))** | **Polybrominated Biphenyls (PBB)** | **Polybrominated Diphenyl Ethers (PBDE)** |
| Housing | O | O | O | O | O | O |
| PCB Board | X | O | O | O | O | O |
| Electrical Connectors | O | O | O | O | O | O |
| Piezoelectric Crystals | X | O | O | O | O | O |
| Epoxy | O | O | O | O | O | O |
| Teflon | O | O | O | O | O | O |
| Electronics | O | O | O | O | O | O |
| Thick Film Substrate | O | O | X | O | O | O |
| Wires | O | O | O | O | O | O |
| Cables | X | O | O | O | O | O |
| Plastic | O | O | O | O | O | O |
| Solder | X | O | O | O | O | O |
| Copper Alloy/Brass | X | O | O | O | O | O |

This table is prepared in accordance with the provisions of SJ/T 11364.

O: Indicates that said hazardous substance contained in all of the homogeneous materials for this part is below the limit requirement of GB/T 26572.

X: Indicates that said hazardous substance contained in at least one of the homogeneous materials for this part is above the limit requirement of GB/T 26572.
Lead is present due to allowed exemption in Annex III or Annex IV of the European RoHS Directive 2011/65/EU.

IMI SENSORS
A PCB PIEZOTRONICS DIV.

# Model 682A01 24Vdc Primary Switch Mode Power Supply

CE

SENSORS AND INSTRUMENTATION FOR MACHINE CONDITION MONITORING

## Operating Guide with Enclosed Warranty Information


*3425 Walden Avenue, Depew, New York 14043-2495*

*Phone (716) 684-0003*

*Fax (716) 684-3823*

*Toll Free Line 1-800-959-4IMI*



*MANUAL NUMBER: 18640*
*MANUAL REVISION: B*
*ECN NUMBER: 20456*

IMI SENSORS
A PCB PIEZOTRONICS DIV.

SENSORS AND INSTRUMENTATION FOR MACHINE CONDITION MONITORING

## Table of Contents


Introduction ..... Page 3

Specifications ..... Page 4

Block Diagram ..... Page 6

Connection and Operating Instructions ..... Page 7

Characteristics ..... Page 8

ESD Sensitivity ..... Page 9


## Warranty/Servicing


Warranty, Service & Return Procedure ..... Page 10

Customer Service ..... Page 11

# Introduction

The Model 682A01 24Vdc Power Supply functions on the principle of the primary switched regulator and complies with the latest technical standard. This all-purpose device can be used in areas from extreme industrial environments to interference-susceptible office and residential areas.

## ***General Features***

- Electronic protection against short circuits and idling
- Wide-range input (AC and DC network without switchover)
- Reliable Isolation (DIM\N VDE 0100-410, EN 60 950)
- High mains buffering
- LED function display in the secondary circuit
- Plug connectors
- Redundant circuits possible
- Active Signal Output
- Minimum housing width (22.5mm)
- Rail mounting (EN50022) NS 35

# Specifications

## *Input*

- **Input Voltage**: ..... 120-240Vac
- **Input Voltage Range**: ..... 85-264Vac/90-350Vdc
- **Frequency**: ..... 45-65Hz
- **Current Inrush at 25°C**: ..... <15A
- **Current Consumption at Nominal Input Voltage**: ..... 0.3/0.5A (230/120Vac)
- **Mains Buffering**: ..... >20/110ms (120/230Vac)
- **Surge Voltage Protection**: ..... Varistor
- **Fuse**: ..... 1.25A/250V

## *Output*

- **Nominal Voltage/Current**: ..... 24Vdc/1.0A
- **Tolerances**: ..... ±3%
- **Adjustment Range**: ..... Fixed Voltage
- **Switching On After Applying Mains Voltage**: ..... 0.5s(230Vac) /<1s(120Vac)
- **Internal Surge Voltage Protection**: ..... 35Vdc ±5%
- **Function Display**: ..... LED
- **Parallel Switching**: ..... only for the construction of redundant systems.
- **System Deviation with change of load 10-90%**: ..... <1%/<3% (Static/Dynamic)
- **Power Down Time 10-90%**: ..... <150ms
- **Residual Ripple/Peak Switching Voltage**: ..... <100mVpp
- **Maximum Power Loss**: ..... 0.9/4.52W (No Load/Load)
- **DC OK (Active)**: ..... 24Vdc/20mA

## *Environmental*

- **Operating Temperature**: ..... -25°C to +70°C
- **Storage Temperature**: ..... -40°C to +85°C
- **Humidity, non-condensing**: ..... 95% at 25°C
- **Vibration in acc. with IEC 68-2-6**: ..... 15Hz-150Hz, 2.5mm or 2.3g
- **Shock in acc. with IEC 68-2-27**: ..... 30g for 18ms in 3 directions
- **Contamination in acc. with EN 50178**: ..... 2

## *General*

- **Isolation Voltage**: ..... 3kV
- **Installation Position**: ..... On horizontal mounting rail NS 35 according to EN 50022
- **Mounting**: ..... can be mounted in rows – vertical spacing >10cm, horizontal without spacing
- **Conductor Cross Section**: ..... 0.2-2.5mm$^2$, AWG 14-24 Rigid/Flexible
- **Protection Type**: ..... IP 20
- **Protection Class**: ..... II
- **MTBF**: ..... >500,000h acc. to IEC 1709 (SN29500)
- **Efficiency**: ..... >80%
- **Weight**: ..... approx. 0.21kg
- **Approx. dimensions (WxHxD)**: ..... (22.5x99x114.5)mm

## Block Diagram

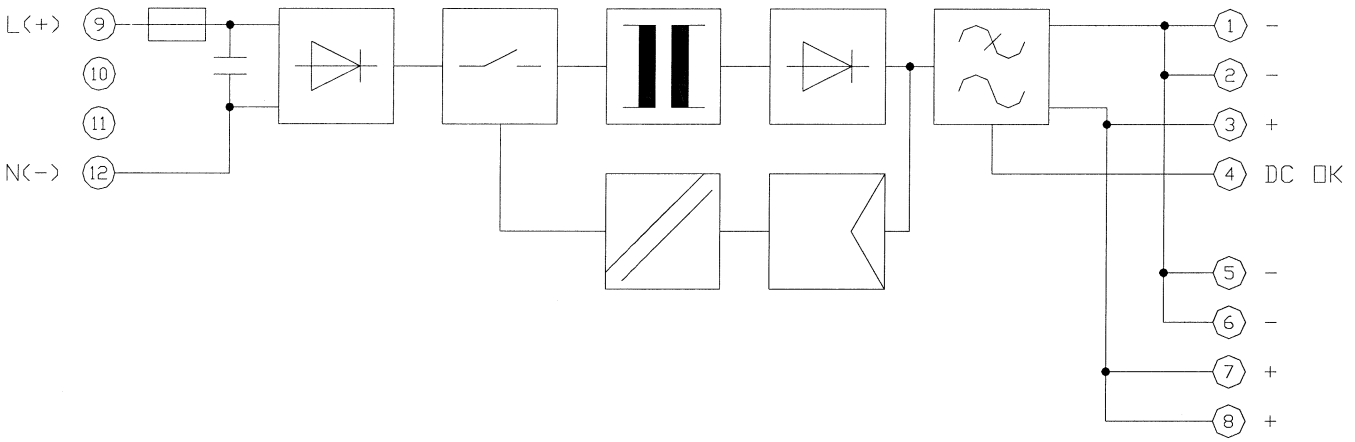

# Connection and Operating Instructions

## DANGER!

- Never work on live equipment!
- When the device is opened, a dangerous voltage may remain at the electrolytic capacitors for up to 2 minutes after shutdown!

## CAUTION!

- A specialist in accordance with the requirements of EN 60950 must perform the installation.
- For vertical installations we recommend a minimum spacing of 10cm between other modules and this power supply to insure sufficient convection.
- No minimum spacing is required for horizontal mounting.
- The mains feed line must have an appropriate fixing or strain relief outside the device.
- The supply-side installation and the connection via screw terminal blocks must be done in a way that ensures protection against electric shock.

## *Rail Mounting*

The power supply unit can be snapped onto all mounting rails in accordance with EN 50022-35

## *Cable Connection*

This device is equipped with plug connectors. This easy to assemble connection method allows devices to be exchanged easily and the electrical connection to be visibly isolated.

**Connecting Cables:**

Cable cross sections from 0.2 - 2.5mm$^2$ rigid (solid)/flexible (stranded)
AWG 14-24
Copper rated for an operating temperature of 75°C/170°F

**For reliable and touch-proof contacts:**

Strip off 7mm of insulation from the connection wire ends.

**Input:**

The 120-240Vac connection is made by the screw connections L(+) and N(-) on the plug connector. Do not exceed a torque of. 05Nm. The Power LED on the front of the device signalizes that the device is functioning.

**Output:**

The 24Vdc connection is made by the screw connections + and – (torque 0.5Nm) on the plug connection.

**Protection:**

The device must be installed in accordance with the specifications of EN 60950. It must be possible to switch off the device using a suitable disconnecting device outside the power supply. For example, primary side line protection could be used.
**In the case of DC applications, it is necessary to connect in series an adequate fuse.**
On the secondary side, the device is electronically protected against short circuits and idling. In the event of an error, the output voltage is limited to maximum 35V ±5%.

**Redundancy Mode:**

This device can be switched in parallel for redundancy operation. If a fault occurs in the primary circuit of No.1, the device No.2 automatically takes control of the entire power supply without interruption and vice versa.

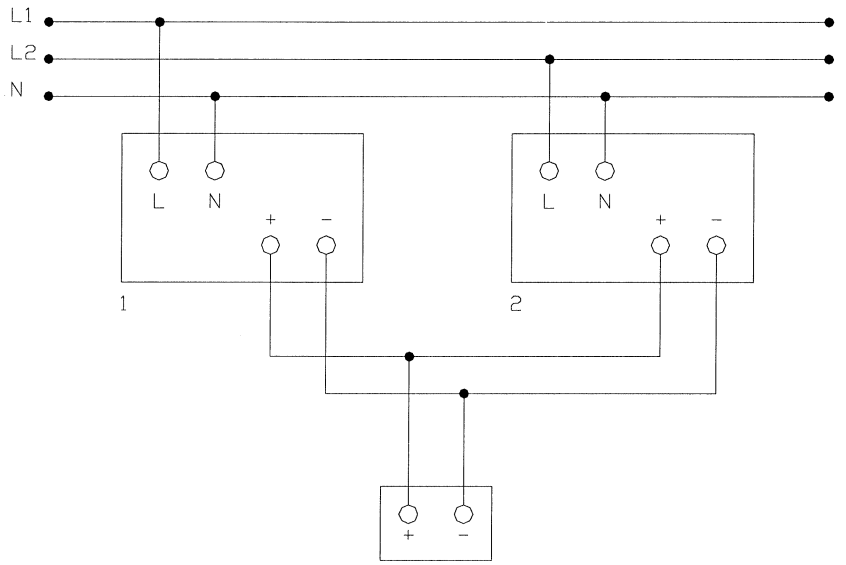


## Characteristics

**Thermal Behavior:**

The device supplies the rated current of 1.0A with an ambient temperature up to 60°C.

**Active Signal Output:**

The 24Vdc (high) signal is between the "DC OK" and "-" connection terminal blocks and can be loaded with 20mA maximum. The signal output will drop to 0V (low) when the output voltage has fallen below 21.5Vdc.
The DC OK signal is isolated from the power output. This provides correct signaling in redundant applications.

## Warning 1 – ESD sensitivity

***The power supply/signal conditioner should not be opened by anyone other than qualified service personnel.*** This product is intended for use by qualified personnel who recognize shock hazards and are familiar with the safety precautions required to avoid injury.

## Warning 2 – ESD sensitivity

This equipment is designed with user safety in mind; however, the protection provided by the equipment may be impaired if the equipment is used in a manner not specified by PCB Piezotronics, Inc.

## Caution 1 – ESD sensitivity

***Cables can kill your equipment.*** High voltage electrostatic discharge (ESD) can damage electrical devices. Similar to a capacitor, a cable can hold a charge caused by triboelectric transfer, such as that which occurs in the following:

- *Laying on and moving across a rug,*
- *Any movement through air,*
- *The action of rolling out a cable, and/or*
- *Contact with a non-grounded person.*

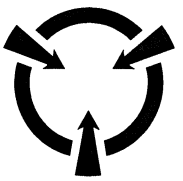

CAUTION
ELECTROSTATIC
DISCHARGE SENSITIVE

***The PCB solution for product safety:***

- *Connect the cables only with the AC power off.*
- *Temporarily "short" the end of the cable before attaching it to any signal input or output.*

## Caution 2 – ESD sensitivity

***ESD considerations should be made prior to performing any internal adjustments on the equipment.*** Any piece of electronic equipment is vulnerable to ESD when opened for adjustments. Internal adjustments should therefore be done ONLY at an ESD-safe work area. Many products have ESD protection, but the level of protection may be exceeded by extremely high voltage.

## Warranty

IMI instrumentation is warranted against defective material and workmanship for 1 year unless otherwise expressly specified. Damage to instruments caused by incorrect power or misapplication, is not covered by warranty. *If there are any questions regarding power, intended application, or general usage, please consult with your local sales contact or distributor.* Batteries and other expendable hardware items are not covered by warranty.

## Service

Because of the sophisticated nature of IMI instrumentation, field repair is typically **NOT** recommended and may void any warranty. If factory service is required, return the instrumentation according to the "Return Procedure" stated below. *A repair and/or replacement quotation will be provided prior to servicing at no charge.* Before returning the unit, please consult a factory IMI applications engineer concerning the situation as certain problems can often be corrected with simple on-site procedures.

## Return procedure

*To expedite returned instrumentation, contact a factory IMI applications engineer for a RETURN MATERIAL AUTHORIZATION (RMA) NUMBER.* Please have information available such as model and serial number. Also, to insure efficient service, *provide a written description of the symptoms and problems with the equipment to a local sales representative or distributor, or contact IMI if none are located in your area.*

Customers outside the U.S. should consult their local IMI distributor for information on returning equipment. For exceptions, please contact the International Sales department at IMI to request shipping instructions and an RMA. For assistance, please call (716) 684-0003, or fax us at (716) 684-3823. You may also receive assistance via e-mail at **imi@pcb.com** or visit our web site at **www.pcb.com**.

## *Customer Service*

IMI, a division of PCB Piezotronics, guarantees **Total Customer Satisfaction**. If, at any time, for any reason, you are not completely satisfied with any IMI product, IMI will repair, replace, or exchange it at no charge. You may also choose, within the warranty period, to have your purchase price refunded.

IMI offers to all customers, at no charge, 24-hour phone support. This service makes product or application support available to our customers, day or night, seven days a week. When unforeseen problems or emergency situations arise, call the **IMI Hot Line at (716) 684-0003**, and an application specialist will assist you.

*3425 Walden Avenue, Depew, NY 14043-2495*
*Phone: (716) 684-0003 • USA Fax: (716) 684-3823 • INTL Fax: (716) 684-4703*

***ICP ® is a registered trademark of PCB Piezotronics, Incorporated, which uniquely identifies PCB sensors that incorporate built-in microelectronics.***

| Model Number | 24 VDC DIN RAIL MOUNT POWER SUPPLY | Revision: B<br>ECN #: 45402 |
|---|---|---|
| 682A01 | | |

| | ENGLISH | SI |
|---|---|---|
| **Performance** | | |
| MTBF | >500000h | >500000h |
| Efficiency | >85% | >85% |
| **Control Interface** | | |
| Display | LED | LED |
| **Environmental** | | |
| Temperature Range(Operating) | -13 to +158 °F | -25 to +70 °C |
| Temperature Range(Storage) | -40 to +185 °F | -40 to +85 °C |
| Humidity Range(Non-Condensing) | <95 % | <95 % |
| **Electrical** | | |
| Power Required | 85-264 VAC / 90-350 VDC | 85-264 VAC / 90-350 VDC |
| Output Voltage | 24 VDC | 24 VDC |
| Output Current | 1.3 Amps | 1.3 Amps |
| Input Frequency | 45 to 65 Hz | 45 to 65 Hz |
| Inrush Current(@ 25 deg C) | <15A | <15A |
| Current Consumption(230/120 VAC) | 0.3/0.5A | 0.3/0.5A |
| Fuse | 1.25A/250V | 1.25A/250V |
| Mains Buffering | >20/110ms (120/230 VAC) | >20/110ms (120/230 VAC) |
| Surge Voltage Protection | Varistor | Varistor |
| 10-90% Load Tolerance | +/- 3% | +/- 3% |
| Turn On Delay | <0.5/1s (230/120 VAC) | <0.5/1s (230/120 VAC) |
| Turn Off Delay | <150ms | <150ms |
| Internal Surge Voltage Protection | 35 VDC +/- 5% | 35 VDC +/- 5% |
| Parallel Switching | Redundant Systems Only | Redundant Systems Only |
| Ripple Voltage | <20mV pp | <20mV pp |
| Maximum Power Loss | 0.9/4.5W (No Load/Load) | 0.9/4.5W (No Load/Load) |
| DC OK (Active) | 24V / 20mA | 24V / 20mA |
| Insulation Voltage | 3kV | 3kV |
| **Physical** | | |
| Size (Height x Width x Depth) | 3.90 in x 0.89 in x 4.24 in | 99 mm x 22.5 mm x 107 mm |
| Weight | 7.1 oz | 0.2 kg |
| Conductor Cross Section | AWG 14-24 | 0.2-2.5mm^2 |
| Vibration(10Hz-150Hz) | 2g | 0.15mm |
| Shock(3 directions for 18 ms) | 30g | 30g |

CE [4]

*All specifications are at room temperature unless otherwise specified.*
*In the interest of constant product improvement, we reserve the right to change specifications without notice.*

## OPTIONAL VERSIONS

Optional versions have identical specifications and accessories as listed for the standard model except where noted below. More than one option may be used.

**NOTES:**

[1]This device is in compliance with the EMC guideline 89/336/EEC and the low voltage guideline 73/23/EEC

[2]This device must be installed in accordance with the specifications of EN60950. It must be possible to switch off the device using a suitable disconnecting device outside the power supply. For example, primary side line protection could be used.

[3]In the case of DC applications it is necessary to connect in series an adequate fuse

[4]See appropriate Declaration of Conformance for details

| Entered: LK | Engineer: gs | Sales: MC | Approved: BAM | Spec Number: |
|---|---|---|---|---|
| Date: 6/6/2016 | Date: 6/6/2016 | Date: 6/6/2016 | Date: 6/6/2016 | 18194 |

PCB PIEZOTRONICS
3425 Walden Avenue, Depew, NY 14043
Phone: 716-684-0001
Fax: 716-684-0987
E-Mail: info@pcb.com

PCB Piezotronics Inc. claims proprietary rights in the information disclosed hereon. Neither it nor any reproduction thereof will be disclosed to others without the written consent of PCB Piezotronics Inc.

18276

| REVISIONS | | |
|---|---|---|
| REV | DESCRIPTION | DIN |
| C | UPDATED POWER SPECS | 45402 |

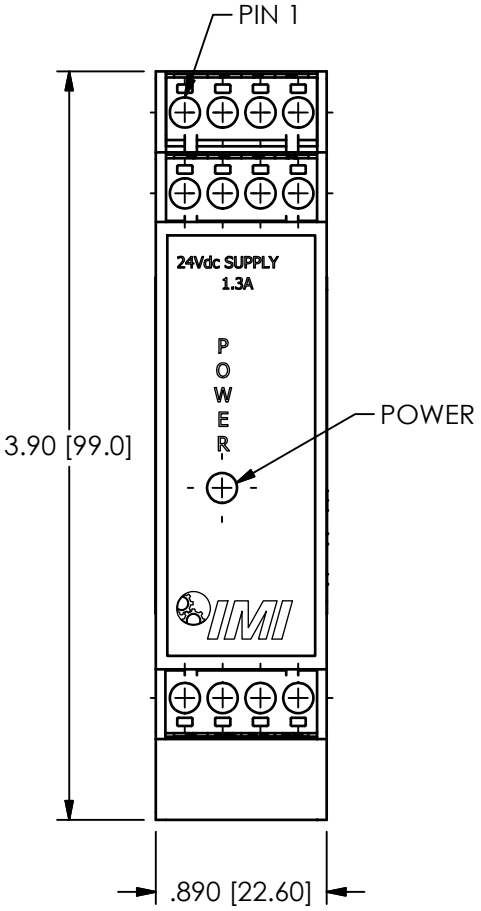


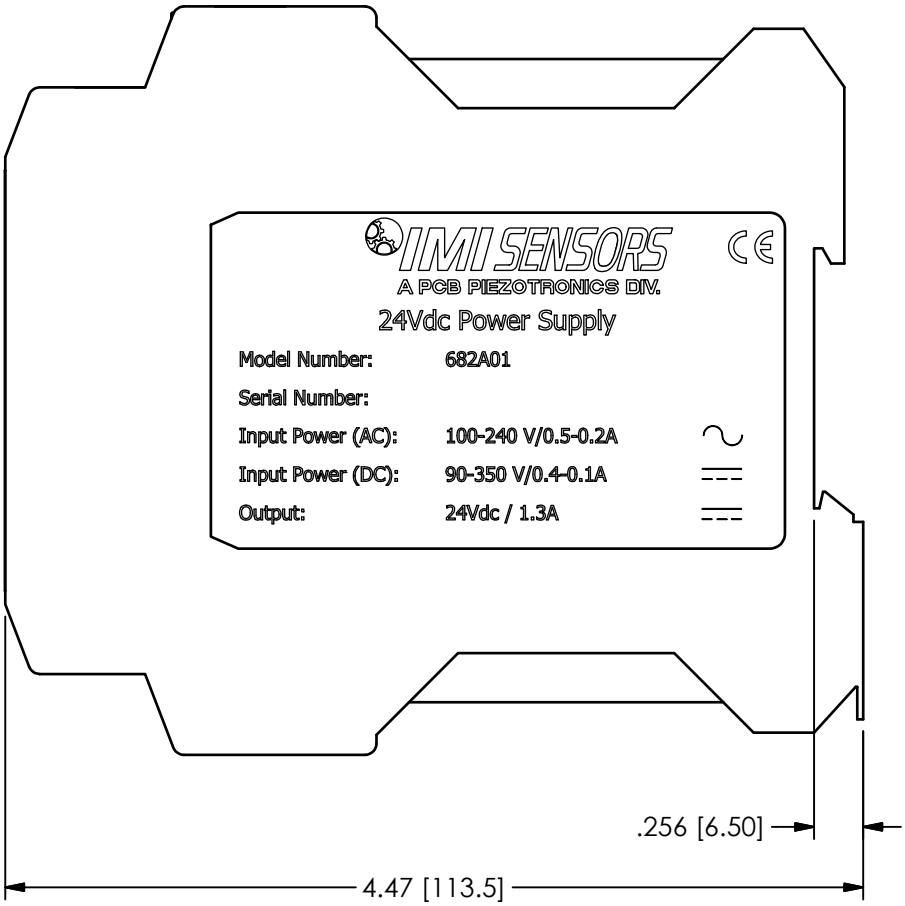


| UNLESS OTHERWISE SPECIFIED TOLERANCES ARE: | |
|---|---|
| DIMENSIONS IN INCHES | DIMENSIONS IN MILLIMETERS [ IN BRACKETS ] |
| DECIMALS XX ±.03<br>XXX ±.010 | DECIMALS X ± 0.8<br>XX ± 0.25 |
| ANGLES ± 2 DEGREES | ANGLES ± 2 DEGREES |
| FILLETS AND RADII .003 - .005 | FILLETS AND RADII 0.07 - 0.13 |

| DRAWN | | CHECKED | | ENGINEER | |
|---|---|---|---|---|---|
| JDM | 6/9/16 | ECB | 6/9/16 | GGS | 6/9/16 |

TITLE

OUTLINE DRAWING
MODEL 682A01
24Vdc DIN RAIL POWER SUPPLY

PCB PIEZOTRONICS
3425 WALDEN AVE. DEPEW, NY 14043
(716) 684-0001 E-MAIL: sales@pcb.com

| CODE IDENT. NO. 52681 | DWG. NO. 18276 |
|---|---|
| SCALE: FULL | SHEET 1 OF 1 |