PCB Piezotronics Inc. claims proprietary rights in the information disclosed hereon. Neither it nor any reproduction thereof will be disclosed to others without the written consent of PCB Piezotronics Inc.

77587

REVISIONS		
REV	DESCRIPTION	DIN
NR	RELEASED TO DRAFTING	54139

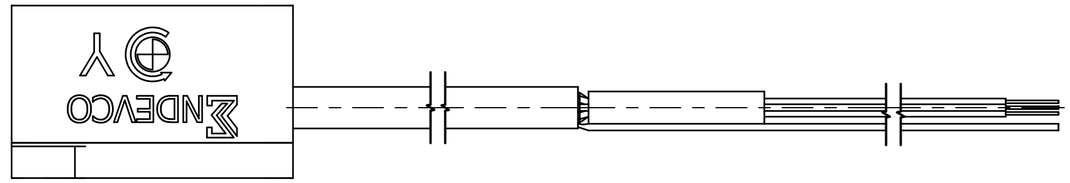

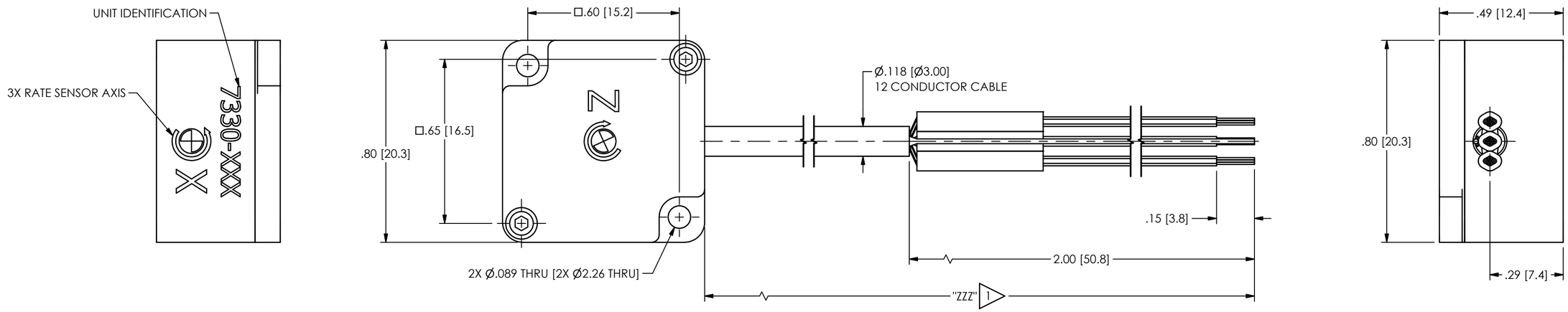

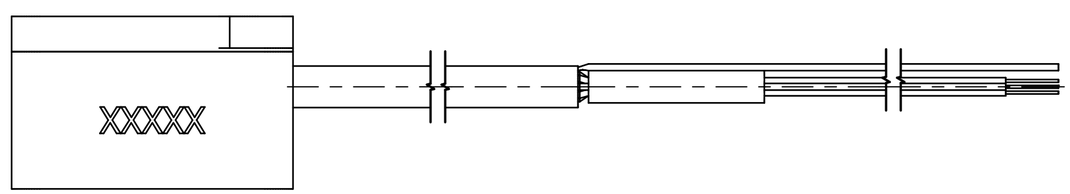

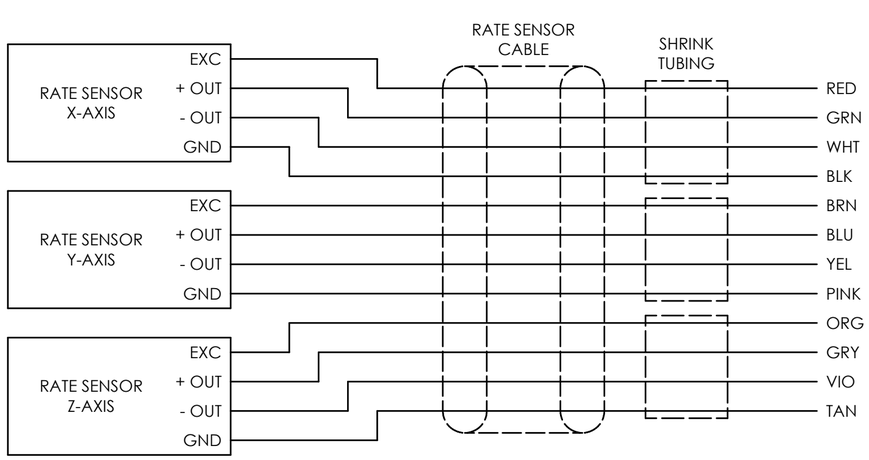

CONTACT	X-AXIS	Y-AXIS	Z-AXIS
EXC	RED	BRN	ORG
+ OUT	GRN	BLU	GRY
- OUT	WHT	YEL	VIO
GND	BLK	PINK	TAN

WIRING DIAGRAM

1 CABLE LENGTH "ZZZ" IS DETERMINED BY MODEL NUMBER, I.E. 7330A-XXX-120, WHICH HAS A CABLE LENGTH OF 120 INCHES

UNLESS OTHERWISE SPECIFIED TOLERANCES ARE:	
DIMENSIONS IN INCHES DECIMALS XX ±.03 XXX ±.010 ANGLES ± 2 DEGREES	DIMENSIONS IN MILLIMETERS [IN BRACKETS] DECIMALS X ± 0.8 XX ± 0.25 ANGLES ± 2 DEGREES
CABLE TOLERANCES IN ENGLISH 1"≤ LENGTH < 1' = +1"/ - 0 1'≤ LENGTH < 5' = +2"/ - 0 5'≤ LENGTH < 100' = +6"/ - 0 100'≤ LENGTH = +1'/ - 0	CABLE TOLERANCES IN METRIC 2.54cm ≤ LENGTH < 30.5cm = +2.54cm/ - 0 30.5cm ≤ LENGTH < 1.5m = +5.1cm/ - 0 1.5m ≤ LENGTH < 30.5m = +15.2cm/ - 0 30.5m ≤ LENGTH = +30.5cm/ - 0
FILLETS AND RADII .003 - .005	FILLETS AND RADII 0.07 - 0.13

DRAWN		CHECKED		ENGINEER	
NJF	08/24/23	JJF	08/24/23	HX	08/24/23

TITLE

OUTLINE DRAWING
7330 SERIES

PCB PIEZOTRONICS
AN AMPHENOL COMPANY
3425 WALDEN AVE. DEPEW, NY 14043
(716) 684-0001 E-MAIL: sales@pcb.com

CODE IDENT. NO.	DWG. NO.	
52681	77587	
SCALE: 3X	SHEET 1 OF 1	